61782324106016

Experiment : 5

Date:

CLASS DIAGRAM AND TIME SEQUENCE

Aim:

To apply software engineering principles by implementing the class diagram and time sequence diagram

Class diagram

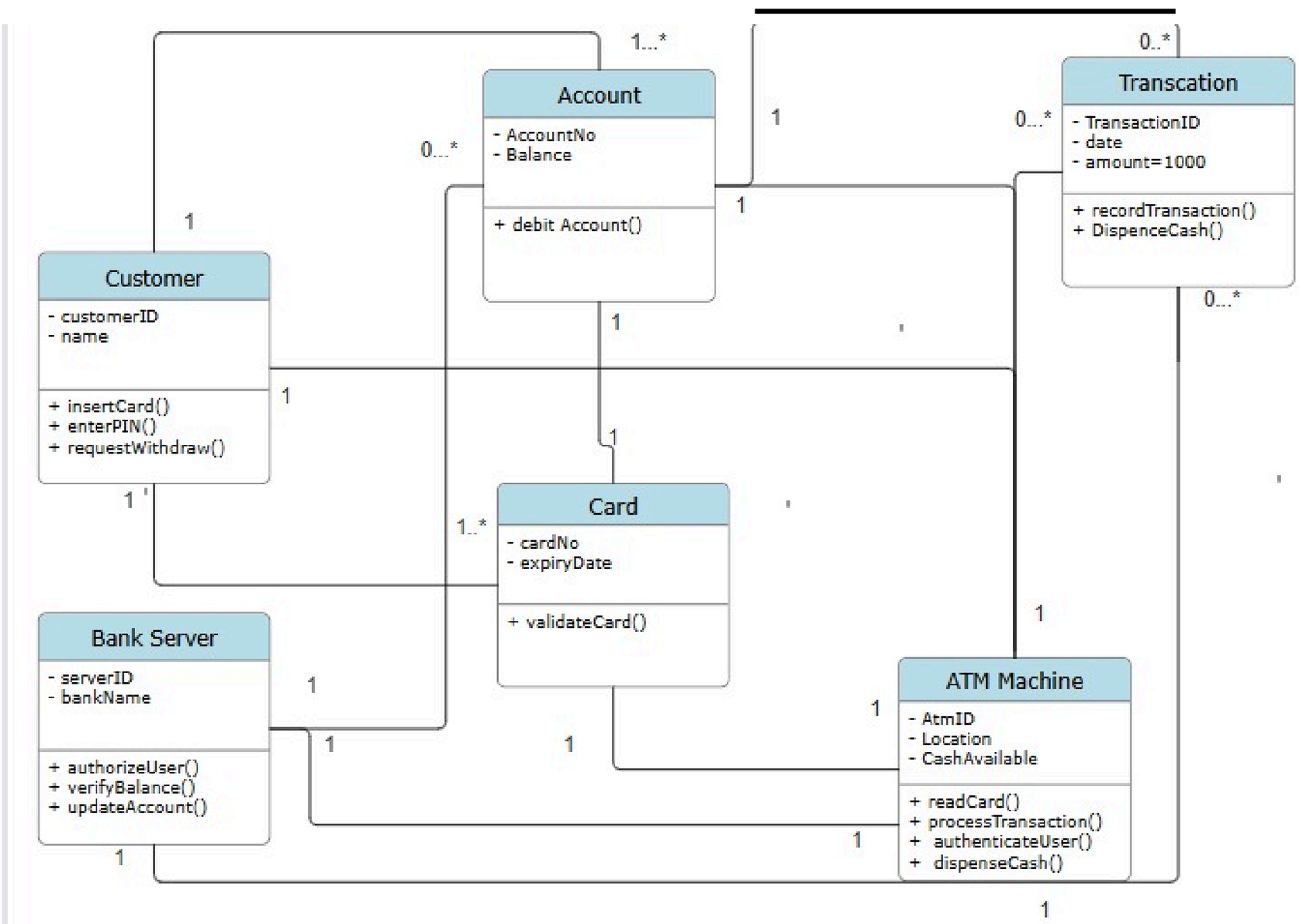

Time sequence diagram

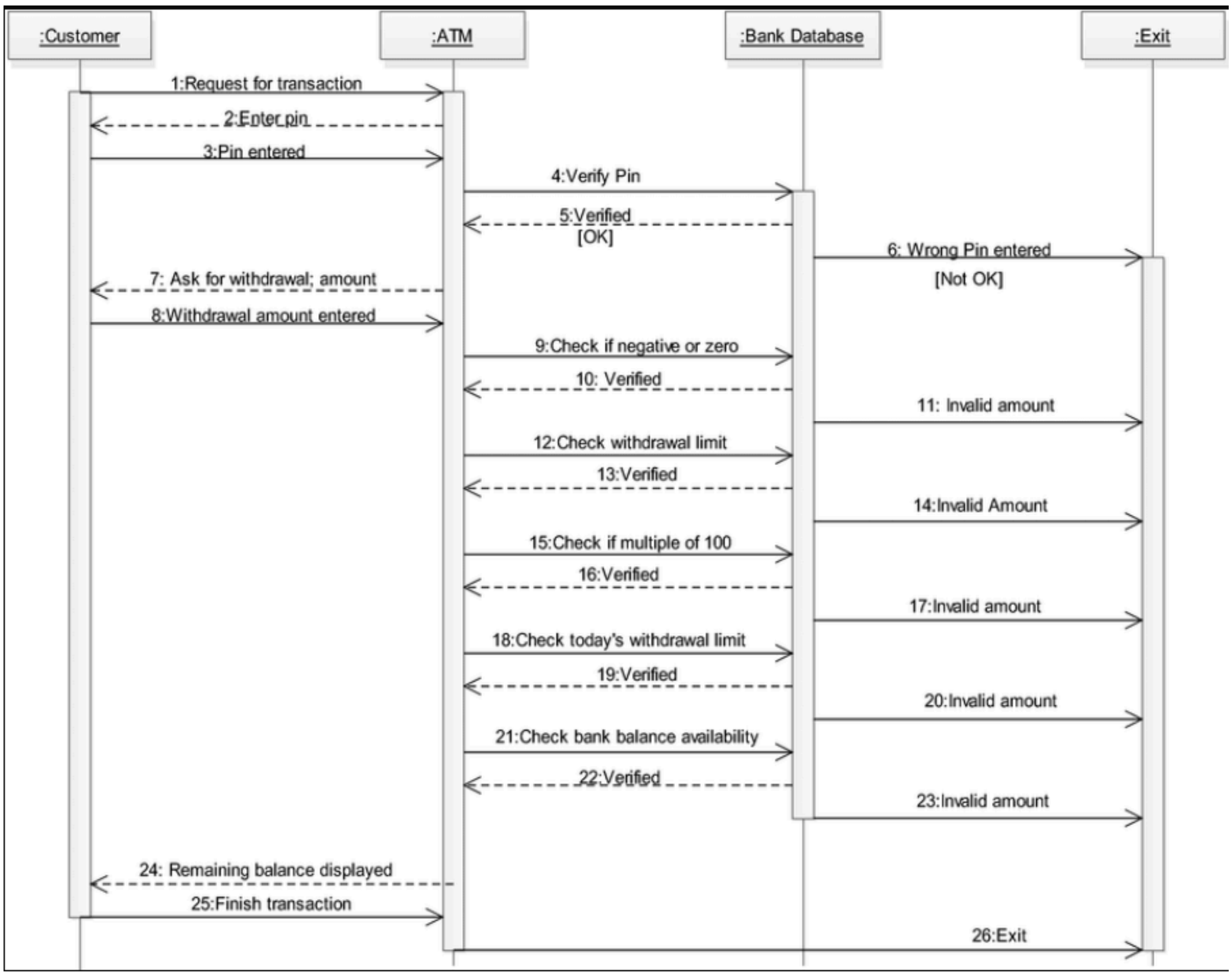

Conclusion:

This experiment proves that Software Engineering principles by designing these diagrams to represent system architecture and behavioral flow.